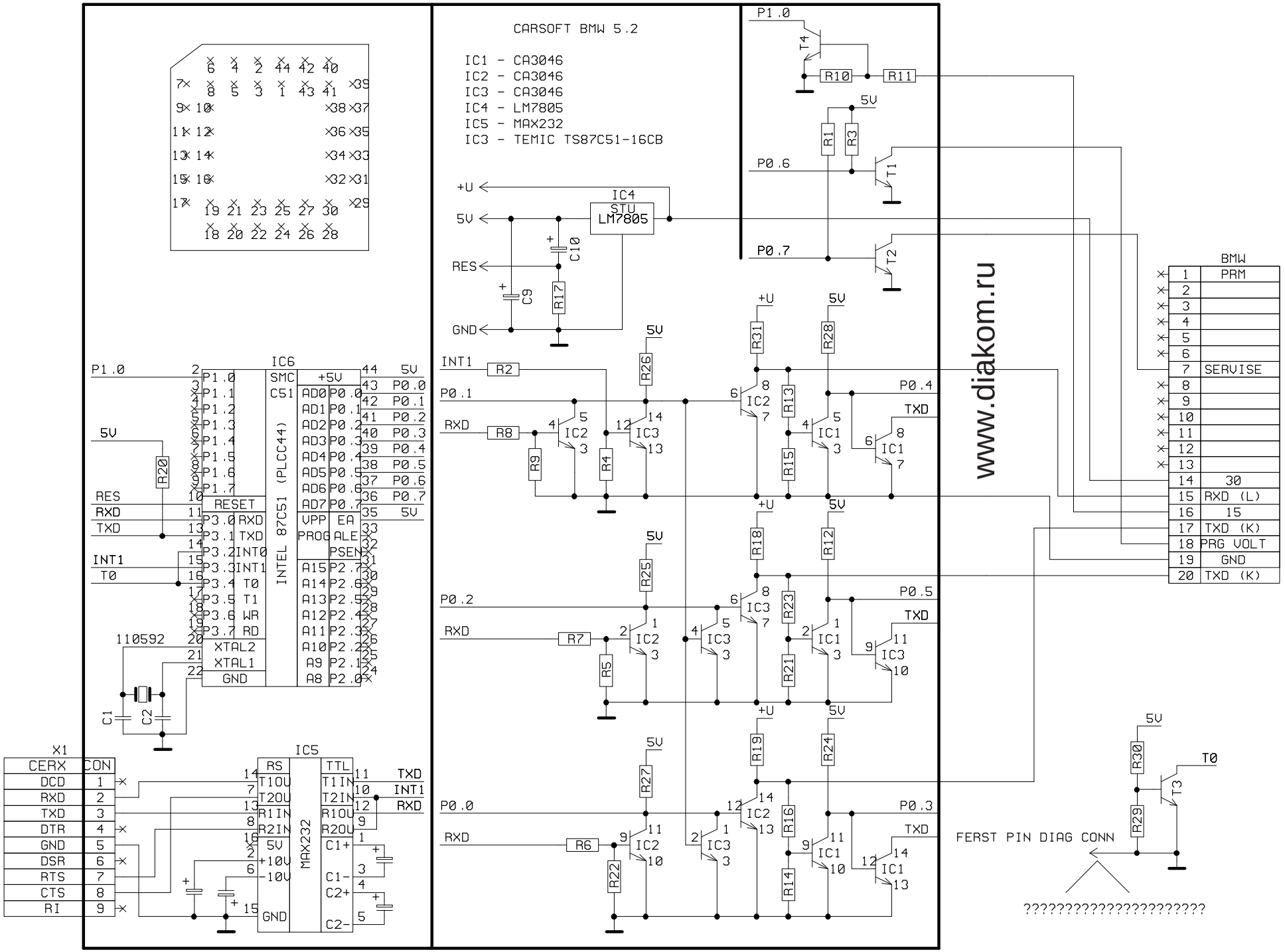
CARSOFT BMW 5.2
IC1 - CA3046
IC2 - CA3046
IC3 - CA3046
IC4 - LM7805
IC5 - MAX232
IC3 - TEMIC TS87C51-16CB
IC4 STV LM7805
IC6 SMC C51 (PLCC44) INTEL 87C51
IC5 MAX232
X1 CERX CON
DCD RXD TXD DTR GND DSR RTS CTS RI
BMW
PRM
SERVISE
30
RXD (L)
15
TXD (K)
PRG VOLT
GND
TXD (K)
FERST PIN DIAG CONN
??????????????????????
www.diakom.ru